Drawing

	Batch #	Appliance part#
Hendi B.V. Steenoven 21 3911 TX Rhenen The Netherlands	401182 until HK072220 except 401248	209202
	Description	
	Deep fryer Mastercook with faucet 8L	

Date	30-04-2021	**Revision #**	1.1
Revision	New model.		

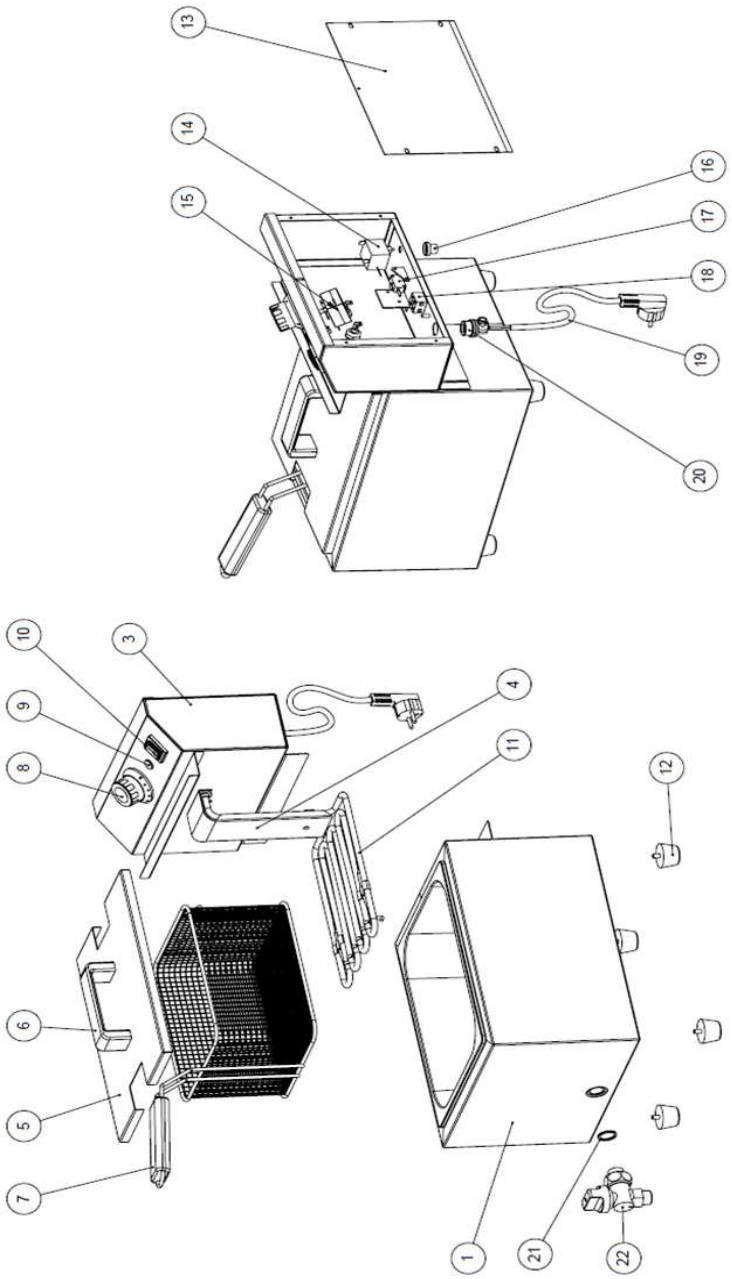

Bill of materials (BOM)

Hendi B.V.
Steenoven 21
3911 TX Rhenen
The Netherlands

Batch #	Appliance part#
401182 until HK072220 except 401248	209202

Description

Deep fryer Mastercook with faucet 8L

Date	30-04-2021	**Revision #**	1.1
Revision	New model.		

Item	Description	Part#	Quantity	Remark	Picture
1	Frame	n/a	1		
2	Fryer bassin	n/a	1		
3	Fryer head	932308	1	(complete assembly)	
4	Heat shield	nss	1	Available as 932308	
5	Lid	934869	1	Incl item 6	
6	Handle	nss	1	Available as 834869	
7	Fryer basket	933664	1		
8	Knob	934852	1	Knob design may differ from original.	
9	Indicator light	927526	1	Also in 932308	
10	Switch	205426	1	Also in 932308	
11	Element	941379	1	Also in 932308	
12	Feet	934876	4		
13	Back cover	nss	1	Available as 932308	
14	Hi-Limiter	930595	1	Also in 932308	
15	Thermostat	930557	1	Also in 932308	
16	Cover Hi-Limiter	nss	1	Available as 930595 and 932308	
17	Microswitch	207093	1	Also in 932308	
18	Terminal	930540	1	Also in 932308	
19	Power cord	912027	1	Also in 932308	
20	Pull relief	912201	1	Also in 932308	
21	Gasket silicone	931042	1		
22	Faucet	251515	1		

n/a -> not available **nss -> not sold separately**

Circuit diagram

	Batch #	Appliance part#
Hendi B.V. Steenoven 21 3911 TX Rhenen The Netherlands	401182 until HK072220 except 401248	209202
	Description	
	Deep fryer Mastercook with faucet 8L	

Date	30-04-2021	**Revision #**	1.1
Revision	New model.		

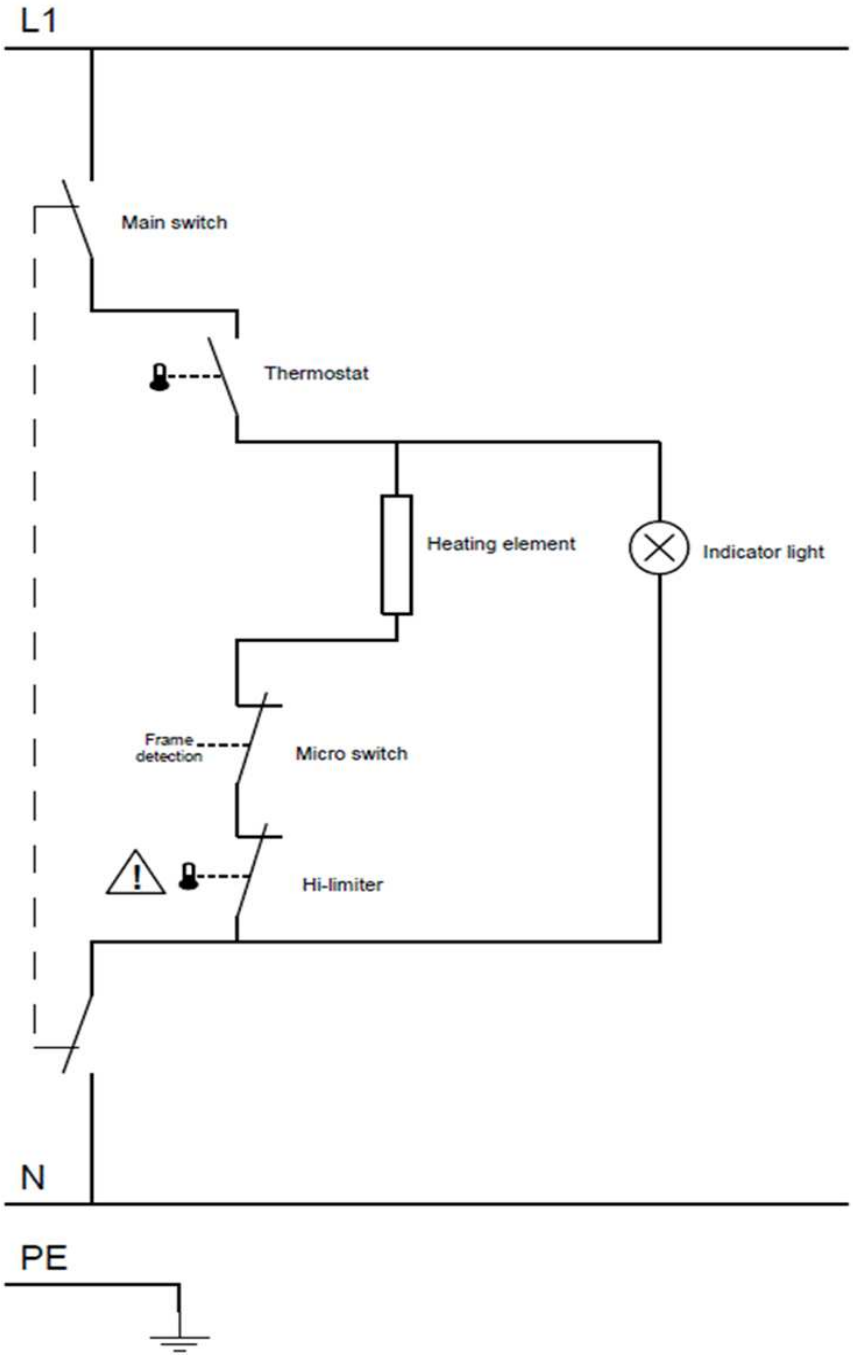

Wiring diagram

	Batch #	Appliance part#
Hendi B.V. Steenoven 21 3911 TX Rhenen The Netherlands	401182 until HK072220 except 401248	209202
	Description	
	Deep fryer Mastercook with faucet 8L	
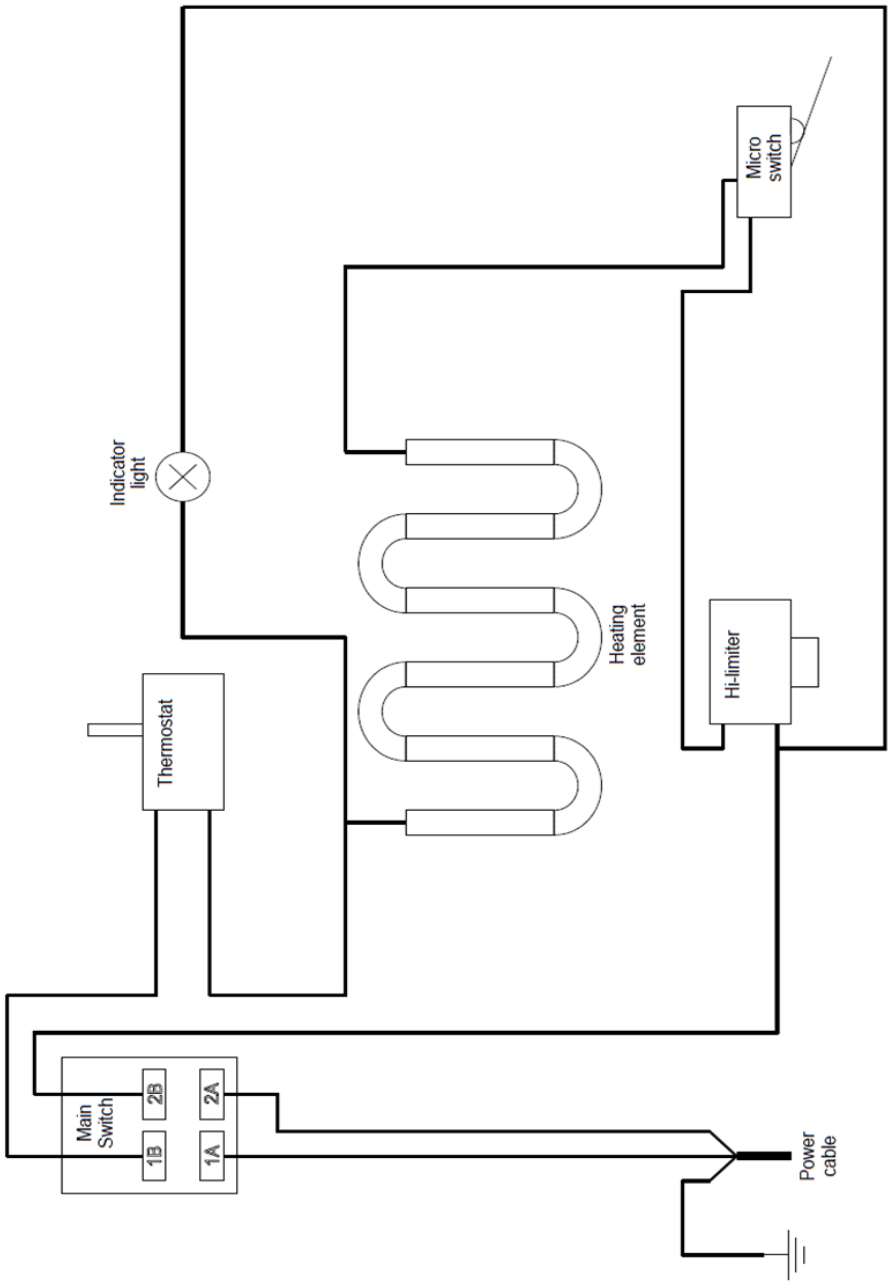
Date	30-04-2021	**Revision #**	1.1
Revision	New model.